51435048001	D471 STNL CIRCLIP TP A 48MM

Brand	-
UBB Code	950357145917
UNSPSC Code	31163202
EAN Code	8715492289896
Material	Stainless steel

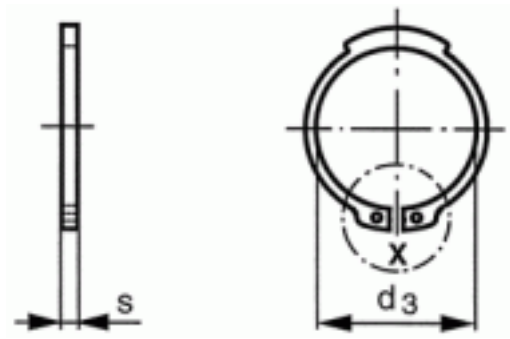

Groove n (min.)	3,8
Groove m (H13)	1,85
Groove d2	45,5
Ring d4	62,5
Ring d3	44,5
Ring s	1,75
For nom. size	48
Packaging (Piece)	10.0

FABORY
MASTERS IN FASTENERS

Copyright Fabory Group