| 55660042032 | D7981CH STNL A4 PAN TAPSCR PH ST4,2X32MM |
|---|---|

| | |
|---|---|
| Brand | - |
| UBB Code | 950352561977 |
| UNSPSC Code | 31161507 |
| EAN Code | 8715492350626 |
| Head shape | pan head |
| Thread | Self tapping thread |
| Material | Stainless steel |
| Material technical | A4 |
| Driving features | Phillips |
| DIN | 7981 C |

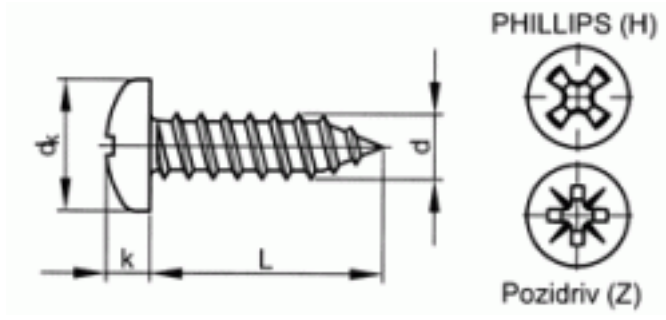


| | |
|---|---|
| L | 32 |
| d | 4,2 |
| Packaging (Piece ) | 200.0 |

FABORY
MASTERS IN FASTENERS

Copyright Fabory Group