55680063038	D7982CH STNL A4 CSK TAPP SCR PH 6,3X38

Brand	-
UBB Code	950352568907
UNSPSC Code	31161507
EAN Code	8715492351333
Head shape	square head
Thread	Self tapping thread
Material	Stainless steel
Material technical	A4
Driving features	Phillips

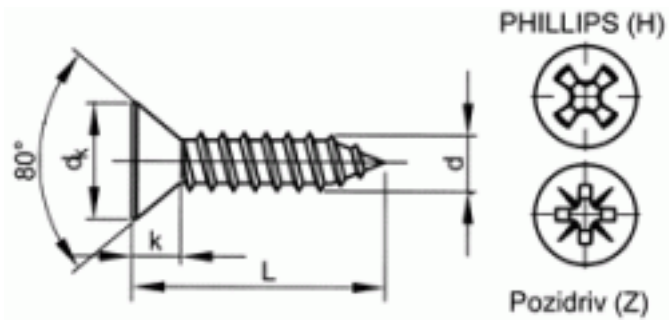

L	38
d	6,3
Packaging (Piece)	100.0

FABORY
MASTERS IN FASTENERS

Copyright Fabory Group