55680042019	D7982CH STNL A4 CSK TAPP SCR PH 4,2X19

Brand	-
UBB Code	950352566505
UNSPSC Code	31161507
EAN Code	8715492351098
Head shape	square head
Thread	Self tapping thread
Material	Stainless steel
Material technical	A4
Driving features	Phillips

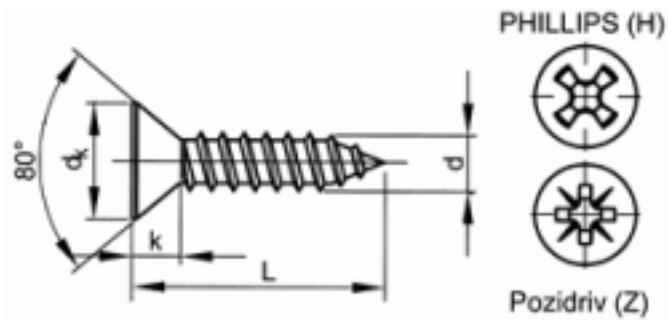

L	19
d	4,2
Packaging (Piece)	200.0

FABORY
MASTERS IN FASTENERS

Copyright Fabory Group