38100640001	D125-1A ST FLATW M64

Brand	-
UBB Code	950356456398
UNSPSC Code	31161807
EAN Code	8715492085290
Material technical	140HV
Material	Steel
NEN	2269 A

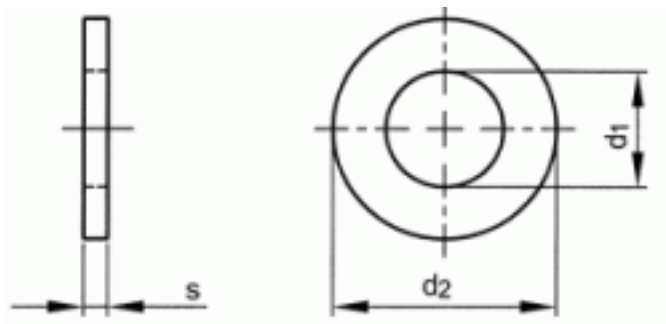

s	9
d2	115
d1	66
For nom. size	M64
Packaging (Piece)	1.0

FABORY
MASTERS IN FASTENERS

Copyright Fabory Group