38100160001	D125-1A ST FLATW M16

Brand	-
UBB Code	950356024402
UNSPSC Code	31161807
EAN Code	8715492084989
Material technical	140HV
Material	Steel
NEN	2269 A

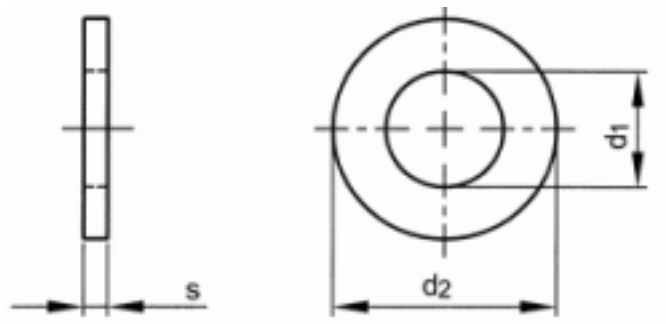

s	3
d2	30
d1	17
For nom. size	M16
Packaging (Piece)	100.0

FABORY
MASTERS IN FASTENERS

Copyright Fabory Group