26680063032	D7982CH ST ZPL CSK TSCR PH SP 6,3X32

Brand	-
UBB Code	950352120915
UNSPSC Code	31161507
EAN Code	8715492945853
Thread	Self tapping thread
Material	Steel
Surface treatment	Zinc plated
Driving features	Phillips

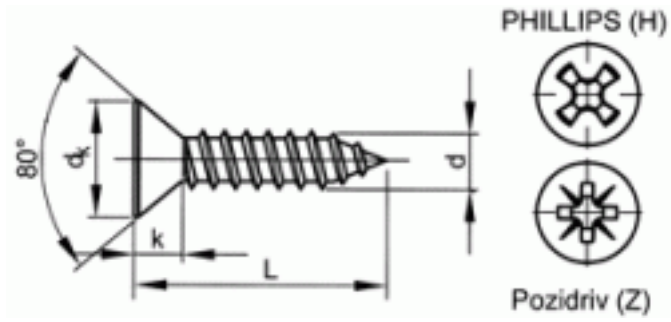

L	32
d	6,3
Packaging (Piece)	100.0

FABORY
MASTERS IN FASTENERS

Copyright Fabory Group