26660042013	D7981CH ZPL PNHD TAPSC PH SP ST4,2X13MM

Brand	-
UBB Code	950352110775
UNSPSC Code	31161507
EAN Code	8715492944412
Head shape	pan head
Thread	Self tapping thread
Material	Steel
Surface treatment	Zinc plated
Driving features	Phillips
DIN	7981 C

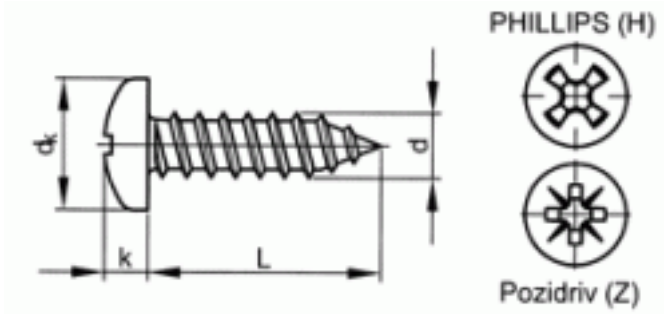

L	13
d	4,2
Packaging (Piece)	200.0

FABORY
MASTERS IN FASTENERS

Copyright Fabory Group