07840060006	D916 CL.45H SOCSET SCR CUPP M6X6

Brand	-
UBB Code	950351516204
UNSPSC Code	31161518
EAN Code	8715492162908
Driving features	hexagon socket
Thread	Metric thread
Class	45H
Material	Steel

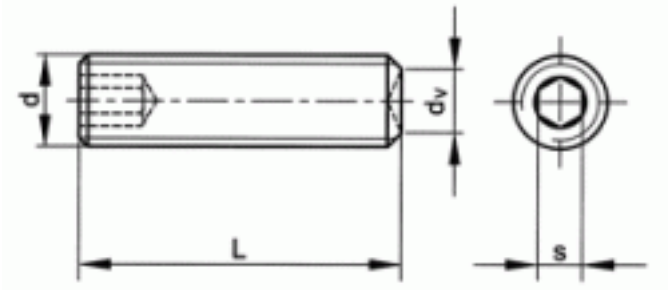

s	3
dv	3
P	1
L	6
d	M6
Packaging (Piece)	200.0

FABORY
MASTERS IN FASTENERS

Copyright Fabory Group