# Cable routing system - CGSA 50 - 3071401

Please be informed that the data shown in this PDF Document is generated from our Online Catalog. Please find the complete data in the user's documentation. Our General Terms of Use for Downloads are valid
(http://phoenixcontact.com/download)

Cable routing system, with swivel joint for opening, length: 218 mm, width: 68 mm, height: 140.5 mm, diameter: 42 mm, color: gray

## Your advantages

- Route pre-assembled cables and conductors easily, thanks to the patent-pending swivel joint
- Subsequent wiring is easy, thanks to swivel joint openings that can be operated without tools
- Mechanical cable protection and bundling, thanks to protective covers that can be attached without tools
- Integrated flanges with strain relief make assembly quick and easy
- Easily plan cable harnesses: the cable length is predefined through the swivel arm
- Cable routing for the control cabinet door can be planned in the CAD system, thanks to the defined installation space and swivel range
- High-grade elastic and mechanically resilient plastic, certified according to UL 94 for flammability rating: V0

RoHS

## Key Commercial Data

| | |
|---|---|
| Packing unit | 1 pc |
| GTIN | 4 055626 289175 |
| GTIN | 4055626289175 |
| Weight per Piece (excluding packing) | 429.700 g |
| Custom tariff number | 39259020 |
| Country of origin | Poland |

## Technical data

### General

| | |
|---|---|
| Note | Cable binders can be used up to a width of 4 mm and from a length of 40 mm |
| Color | gray |
| Material | PC |
| Flammability rating according to UL 94 | V0 |
| Number of cables | 100 for 1.5 mm² |
| Cable feed-through | Cables can be pulled through at an angle between 120° and 180°. |

# Cable routing system - CGSA 50 - 3071401

## Technical data

### General

| | |
|---|---|
| | Conductors up to 22 mm in diameter can be fed in. |
| Components | halogen-free |
| Result of thermal test | Test passed |
| Proof of thermal characteristics (needle flame) effective duration | 30 s |
| Relative insulation material temperature index (Elec., UL 746 B) | 130 °C |
| Static insulating material application in cold | -40 °C |
| Fire protection for rail vehicles (DIN EN 45545-2) R22 | HL 1 - HL 3 |
| Fire protection for rail vehicles (DIN EN 45545-2) R23 | HL 1 - HL 3 |
| Fire protection for rail vehicles (DIN EN 45545-2) R24 | HL 1 - HL 3 |

### Dimensions

| | |
|---|---|
| Width | 68 mm |
| Length | 218 mm |
| Height | 140.5 mm |
| Diameter | 42 mm |
| Hole diameter | 5.5 mm |
| Marking field | 36,8 x 27,2 mm |
| Cable length | 700 mm ... 460 mm |

### Standards and Regulations

| | |
|---|---|
| Flammability rating according to UL 94 | V0 |
| Fire protection for rail vehicles (DIN EN 45545-2) R22 | HL 1 - HL 3 |
| Fire protection for rail vehicles (DIN EN 45545-2) R23 | HL 1 - HL 3 |
| Fire protection for rail vehicles (DIN EN 45545-2) R24 | HL 1 - HL 3 |

### Environmental Product Compliance

| | |
|---|---|
| China RoHS | Environmentally friendly use period: unlimited = EFUP-e |
| | No hazardous substances above threshold values |

## Drawings

Dimensional drawing

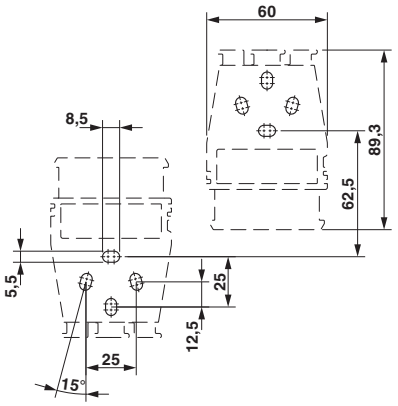


Dimensional drawing

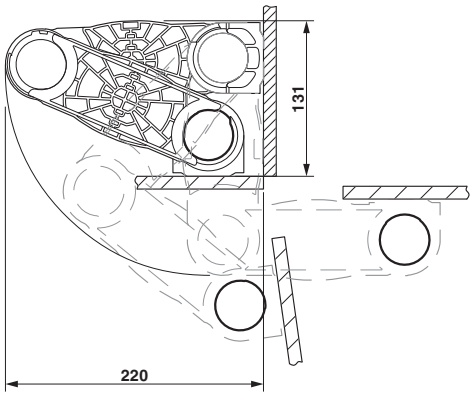

# Cable routing system - CGSA 50 - 3071401

Dimensional drawing

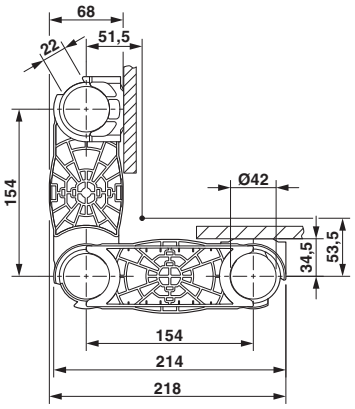


Dimensional drawing

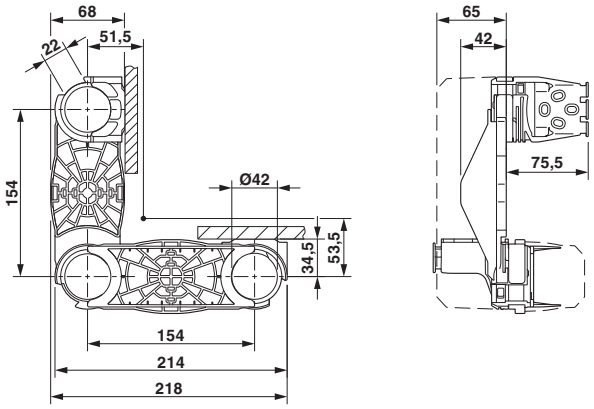


## Classifications

### eCl@ss

| | |
|---|---|
| eCl@ss 4.0 | 27140602 |
| eCl@ss 4.1 | 27140602 |
| eCl@ss 5.0 | 27140602 |
| eCl@ss 5.1 | 27140602 |
| eCl@ss 6.0 | 27189200 |
| eCl@ss 7.0 | 27189261 |
| eCl@ss 8.0 | 27189261 |
| eCl@ss 9.0 | 27189261 |

### ETIM

| | |
|---|---|
| ETIM 2.0 | EC000012 |
| ETIM 3.0 | EC000012 |
| ETIM 4.0 | EC000012 |
| ETIM 5.0 | EC002620 |
| ETIM 6.0 | EC002620 |

# Cable routing system - CGSA 50 - 3071401

## Classifications

### ETIM

| | |
|---|---|
| ETIM 7.0 | EC002620 |

### UNSPSC

| | |
|---|---|
| UNSPSC 6.01 | 30101815 |
| UNSPSC 7.0901 | 30101815 |
| UNSPSC 11 | 30101815 |
| UNSPSC 12.01 | 30101815 |
| UNSPSC 13.2 | 30101815 |

## Approvals

### Approvals

Approvals

VDE Zeichengenehmigung

Ex Approvals

### Approval details

| | | | |
|---|---|---|---|
| VDE Zeichengenehmigung | | http://www2.vde.com/de/Institut/Online-Service/VDE-geprueftеProdukte/Seiten/Online-Suche.aspx | 40047466 |

## Accessories

### Accessories

### Cable tie

Cable tie - WT-HF 3,6X140 - 3240744

Cable binders for quick and secure bundling, standard version

# Cable routing system - CGSA 50 - 3071401

## Accessories

Cable tie - WT-HF 3,6X140 BK - 3240745

Cable binders for quick and secure bundling, standard version

---

Cable tie - WT-HF 3,6X200 - 3240748

Cable binders for quick and secure bundling, standard version

---

Cable tie - WT-HF 3,6X200 BK - 3240749

Cable binders for quick and secure bundling, standard version

---

Cable tie - WT-HF 3,6X290 - 3240752

Cable binders for quick and secure bundling, standard version

---

Cable tie - WT-HF 3,6X290 BK - 3240753

Cable binders for quick and secure bundling, standard version

---

## Cover profile

# Cable routing system - CGSA 50 - 3071401

## Accessories

Cover - CGS-AH 50 SET - 3071410

Cover, packed in pairs, length: 214 mm, width: 63 mm, height: 54.5 mm, color: gray

Phoenix Contact 2019 © - all rights reserved
http://www.phoenixcontact.com