Ferrule - AI 16 -18 BU - 3200629

Please be informed that the data shown in this PDF Document is generated from our Online Catalog. Please find the complete data in the user's documentation. Our General Terms of Use for Downloads are valid
(http://phoenixcontact.com/download)

The figure shows the version AI 0.75-8 BU

Ferrule, Sleeve length: 18 mm, Length: 29 mm, Color: blue

Why buy this product

- The AI 0,25.. ferrules can also be used to process 0.14 mm² conductors
- The insulation reliability of close connections is increased and the splicing of wires is prevented
- The ferrules with plastic sleeve are made from soft tin-plated electrolytic copper

Key commercial data

Packing unit	100 pc
Minimum order quantity	100 pc
GTIN	4 017918 094232
Weight per Piece (excluding packing)	0.97 g
Custom tariff number	85369010
Country of origin	Germany

Technical data

Dimensions

Length (b)	29 mm
Maximum stripping length	22 mm
Sleeve length	18 mm
Inner dimension of the insulating collar (d)	8.8 mm
Ferrule diameter	5.8 mm
Insulating collar thickness	0.4 mm
Sleeve wall thickness	0.2 mm

Ambient conditions

Short-term temperature	120 °C
Max. permanent temperature	105 °C

Ferrule - AI 16 -18 BU - 3200629

Technical data

General

Color	blue
Components	free from silicone and halogen
Inflammability class according to UL 94	HB
Material	E-CU

Classifications

eCl@ss

eCl@ss 4.0	27060701
eCl@ss 4.1	27060701
eCl@ss 5.0	27400201
eCl@ss 5.1	27400201
eCl@ss 6.0	27400201
eCl@ss 7.0	27400201
eCl@ss 8.0	27400201

ETIM

ETIM 2.0	EC000005
ETIM 3.0	EC000005
ETIM 4.0	EC000005
ETIM 5.0	EC000005

UNSPSC

UNSPSC 6.01	30212109
UNSPSC 7.0901	27121703
UNSPSC 11	27121703
UNSPSC 12.01	27121703
UNSPSC 13.2	27121703

Approvals

Approvals

Approvals

CSA / CSAus / EAC / cCSAus

Ex Approvals

Approvals submitted

Ferrule - AI 16 -18 BU - 3200629

Approvals

Approval details

CSA

CSAus

EAC

cCSAus

Drawings

Dimensioned drawing

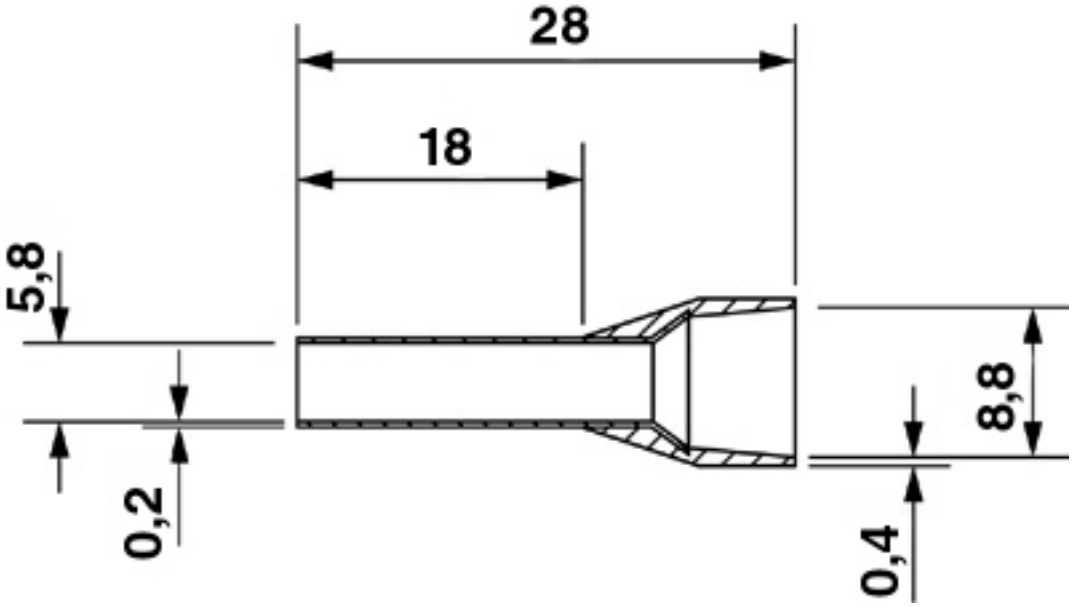

Phoenix Contact 2015 © - all rights reserved
http://www.phoenixcontact.com